Korean J. Chem. Eng., **25**(6), 1495-1498 (2008)

Phase equilibria behavior of carbon dioxide-n-hexane-naphthalene ternary system

Inas Muen AlNashef**,†, Rasheed S. Al-Ameeri*, Taher A. Al Sahhaf*, and Salah E. M. Hamam***

*Chemical Engineering Department, Kuwait University, Safat 13060, Kuwait
**Department of Chemical Engineering, King Saud University, Riyadh 11421, Saudi Arabia
(*Received 20 August 2007 • accepted 13 April 2008*)

Abstract−The ternary system CO_2-n-hexane-naphthalene was studied to determine the bubble point pressure at three different temperatures (40, 60 and 80 °C) and a fixed n-hexane to naphthalene mole ratio of 9 : 1. The experimental data obtained were predicted by using the Peng-Robinson equation of state with two interaction parameters. The experimental and calculated bubble point pressures were generally in good agreement at the three temperatures and over the composition range investigated.

Key words: Phase Equilibria, Ternary System, Carbon Dioxide, Hydrocarbons, Peng-Robinson Eqation of State

INTRODUCTION

The equilibrium properties of CO_2-hydrocarbon systems play an important role in the design of the flooding process used for enhanced oil recovery as well as many other industrial processes. Carbon dioxide is readily available, cheap, non-toxic and non-flammable, making it a favored solvent for use in the extraction process. A reliable equation of state is needed to be able to model the process. Binary phase equilibria data are needed to evaluate the interaction parameters of the equation of state. There are data available on the phase equilibria of binary systems containing CO_2; however, data on ternary systems containing CO_2 and hydrocarbons are relatively scarce in the literature. A review by Brunner and Dohrn [1] covered the period 1988-1993. Another review by Christov and Dohrn [2] covered the period 1994-1999. Over the past few years we have concentrated our efforts in this area in an attempt to contribute to the limited data available. Two previous studies covered the ternary systems CO_2-benzene-naphthalene and CO_2-cyclohexane-naphthalene [3,4]. In this study, bubble point pressure data were measured for the ternary system CO_2-n-hexane-naphthalene at three different temperatures, 40, 60 and 80 °C, at a fixed mole ratio of n-hexane to naphthalene of 9:1. For the corresponding binary data, Barrick et al. [5] studied the solubility of CO_2 in naphthalene. Vapor-liquid phase equilibrium data for carbon dioxide-n-hexane were reported by Li et al. [6]. Vapor pressure data of binary mixtures of carbon dioxide with different hydrocarbons including n-hexane were presented by Kaminishi et al. between 273.15 and 303.15 K only [7]. The literature reviewed, to the author's best search, showed no data available on the ternary system investigated in this study.

EXPERIMENTAL SECTION

1. Materials

Carbon dioxide used was supplied by Kuwait Refrigeration Company with a minimum purity of 99.99 wt%, n-hexane was supplied by Philips Petroleum Company with a minimum purity of 99.95 wt% and naphthalene was supplied by BDH Company with a minimum purity of 99 wt% and were used without further purification.

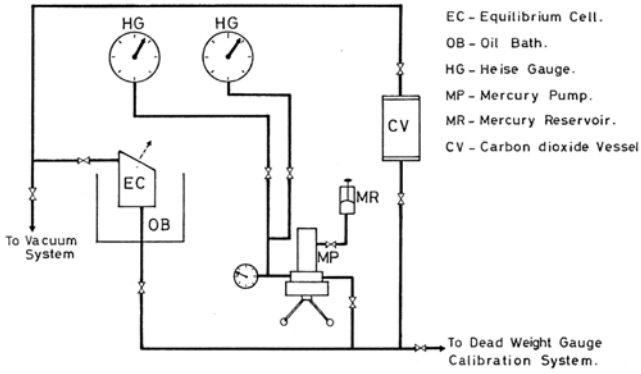

Fig. 1. A schematic diagram of the apparatus.

2. Apparatus and Procedure

The experimental apparatus and procedures used in this work are similar to those previously described [3,4]. Fig. 1 shows a schematic diagram of the apparatus. The equilibrium cell is a Ruska visual cell equipped with rocking mechanism to facilitate the attainment of equilibrium and is immersed in a constant temperature oil bath. The expected uncertainties are ±0.1 °C in temperature and 0.002 in mole fraction. The system pressure is measured by two tested Heise gauges (0-7 MPa and 0-70 MPa ranges). The expected uncertainty in pressure measurements is 0.1% of the full scale.

A solution of naphthalene in a thoroughly degassed n-hexane of a fixed mole ratio of 9 : 1 was gravimetrically prepared and fed to the equilibrium cell. A known amount of CO_2 was injected and the contents of the cell were pressurized to a single phase by means of a Ruska mercury hand pump. The bubble point pressure was determined by visually observing the first bubble formed within the range of the break-point in the pressure-volume diagram as the systems passed from a single phase to a two-phase region.

RESULTS AND DISCUSSION

The operation of the apparatus was previously tested by meas-

†To whom correspondence should be addressed.
E-mail: alnashef@ksu.edu.sa

Table 1. Experimental and calculated (PR EOS) bubble point pressures for CO_2-hexane-naphthalene, N_H/N_N=9 : 1

X_{CO_2}	40 °C				60 °C				80 °C			
	P_{exp} (MPa)	P_{calc} (MPa)	APD*	10^5Y_{Naph}	P_{exp} (MPa)	P_{calc} (MPa)	APD	10^5Y_{Naph}	P_{exp} (MPa)	P_{calc} (MPa)	APD	10^4Y_{Naph}
0.1671	2.01	1.74	13.4	2.6	2.52	2.15	14.7	7.2	3.03	2.56	15.5	1.8
0.2454	2.75	2.50	9.1	2.4	3.38	3.10	8.3	7.0	4.05	3.71	8.4	1.8
0.3366	3.48	3.31	4.9	2.6	4.36	4.20	3.7	7.9	5.24	5.05	3.6	2.1
0.3862	3.90	3.80	2.6	2.8	4.90	4.79	2.2	8.8	5.87	5.77	1.7	2.4
0.5269	4.89	4.98	1.8	4	6.31	6.40	1.4	14.2	7.76	7.79	0.3	4.3
0.5899	5.62	5.45	3.0	4.9	7.34	7.08	3.5	19.0	8.99	8.68	3.4	6.1
	AAPD**=5.8				AAPD=5.6				AAPD=5.5			

*Absolute percentage deviation, **Average absolute percentage deviation

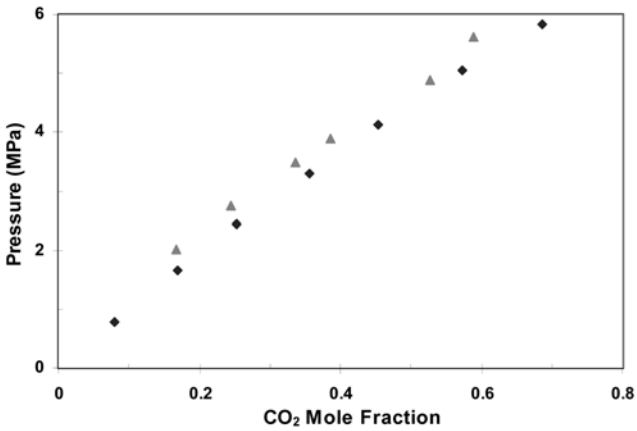

Fig. 2. Bubble point pressure for CO_2-n-hexane (◆) and CO_2-n-hexane-naphthalene (▲) at 40 °C.

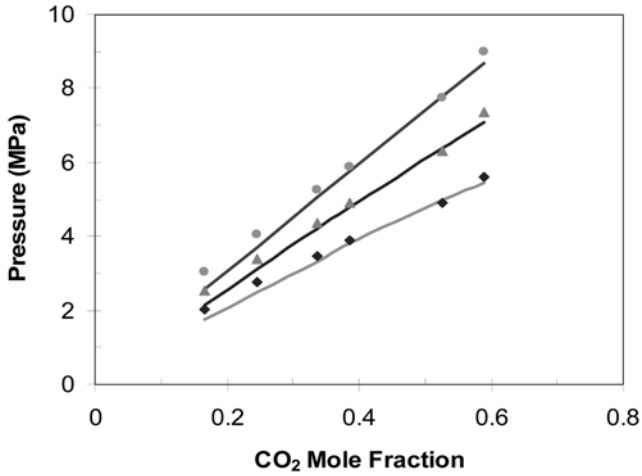

Fig. 3. Measured (◆ 40 °C; ▲ 60 °C; ● 80 °C) and calculated (solid lines) bubble point pressure for the ternary system CO_2-n-hexane-naphthalene system.

uring the vapor pressure of CO_2 at different temperatures and by bubble point pressure measurements of the binary system CO_2-benzene. The results showed good agreement with literature data within ±1% deviation over the mole fraction investigated [3]. We also measured the bubble point pressure for the binary system CO_2-hexane at 40, 60, and 80 °C, and the results showed good agreement with those reported by Li et al. at 40 °C [6].

Bubble point pressure data for CO_2-n-hexane-naphthalene ternary system were performed at 40 °C, 60 °C, and 80 °C and at mole ratio of n-hexane to naphthalene of 9 : 1. The results are shown in Table 1. Measurements at higher naphthalene to n-hexane mole ratios could not be performed because of the limited solubility of naphthalene in n-hexane. However, complete solubility of naphthalene in n-hexane at the temperatures of this investigation is assured during the course of the measurements since a clear solution of naphthalene in n-hexane was prepared at room temperature.

In Fig. 2, the bubble point pressure data for the binary system CO_2-hexane Li et al. [6] and the ternary at 40 °C are compared. It is observed that the P-x line of the ternary system lies above the P-x for the carbon dioxide-n-hexane system, meaning that adding more naphthalene will increase the bubble point pressure. This behavior is similar to that reported for CO_2-cyclohexane-naphthalene and CO_2-benzene-naphthalene at high pressures [3,4].

It is shown in Fig. 3 that at the constant mole ratio, the bubble

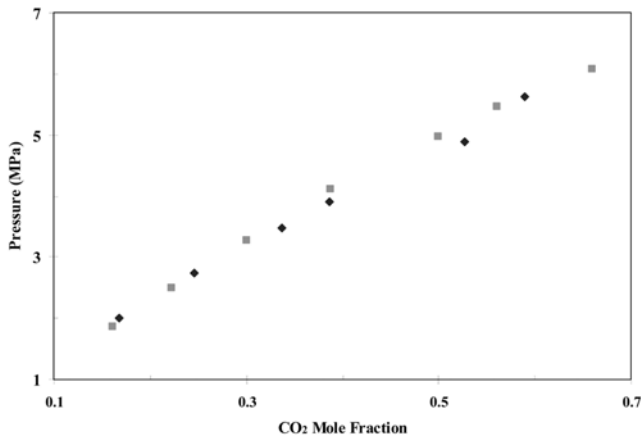

Fig. 4. Measured bubble point pressure for the ternary system CO_2-hexane-naphthalene (◆) and CO_2-benzene-naphthalene (■) at 40 °C.

point pressures increase with an increase in temperature. In addition, the solubility of carbon dioxide in a mixture of n-hexane-naphthalene is found to decrease with an increase in temperature. This behavior is consistent with our previous finding when the light com-

ponent (carbon dioxide) liquid phase activity coefficients is less than 1, and a negative deviation from Raoult's law occur [4,8]. Fig. 4 shows that the bubble point pressure for CO_2-bwnzene-naphthalene is higher than that for CO_2-hexane-naphthalene at the same temperature and CO_2 mole fraction [4]. This is in agreement with the difference in volatility between benzene and hexane.

1. Data Prediction

The data from the present work have been predicted by the Peng-Robinson equation of state [9], with the mixing rules.

$$a=\sum_i\sum_j x_i x_j a_{ij} \tag{1}$$

$$a_{ij}=(1-k_{ij})(a_i a_j)^{1/2} \tag{2}$$

$$b=\sum_i\sum_j x_i x_j b_{ij} \tag{3}$$

$$b_{ij}=(1+l_{ij})((b_i+b_j)/2) \tag{4}$$

where k_{ij} and l_{ij} are interaction and size parameters, respectively. In this work the values of k_{ij} and l_{ij} were determined by minimizing the following objective function using Powell's optimization technique:

$$F=\frac{1}{N_D}\sum_1^{N_D}(P_{calc}-P_{exp})/P_{exp}$$

where N_D is the number of data points used, P_{calc}. and P_{exp}. are the calculated and experimental bubble point pressures, respectively.

For the binary system, CO_2-naphthalene the data of Barrick et al. [1] were previously used to obtain values for k_{ij} and l_{ij} which were assumed temperature-independent. These values have been reported earlier [3,4]. Furthermore the data on the system CO_2-n-hexane reported by Li et al. [6] were used to calculate k_{ij} and l_{ij} for this system. The critical properties for n-hexane and naphthalene were taken from Reid et al. [10] and those of carbon dioxide were taken from Vergaftik [11].The parameters k_{ij} and l_{ij} for n-hexane-naphthalene were set equal to zero. The values of these parameters are given in Table 2. The results for the bubble point calculations using the above-mentioned values are also shown in Table 1 along with the average absolute percentage deviation in pressure. The overall average absolute deviation is 250 kPa. The overall average percentage absolute deviation is 5.6%. This is comparable to the results previously reported [3,4,8,12].

Fig. 5 shows the calculated vapor composition of naphthalene for CO_2-benzene-napthalene and CO_2-hexane-napthalene for naphthalene to benzene or hexane mole ratio of 9 : 1 at 40, 60, and 80 °C. As the pressure increases, the mole fraction of naphthalene in the vapor phase decreases and then it starts to increase with the increase of pressure for both systems. The initial decrease of the naphthalene mole ratio was also observed for a number of ternary systems, e.g., CO_2-n-decane-2-methylnaphthalene [12]; CO_2-n-butyl-benzene-2-methylnaphthalene [13]; and CO_2-toluene-1-methylnaphthalene [8], Fig. 6. For all temperatures investigated the mole fraction of naphthalene in the vapor phase for CO_2-benzene-napthalene is less than that for CO_2-hexane-napthalene. This may attributed to the fact that the solubility of naphthalene in benzene is higher than that in hexane at the same temperature and pressure. The same behavior was observed for the ternary systems CO_2-n-decane-2-methylnaphthalene and CO_2-n-butylbenzene-2-methylnaphthalene studied by Kulkarni et al. [12] and Yang et al. [13].

Table 2. PR binary interaction parameters used for bubble point calculation for CO_2 (1)-hexane (2)-naphthalene (3) ternary system

K_{12}	L_{12}	K_{13}	L_{13}	K_{23}	L_{23}
0.109	0.024	0.077	0.028	0.000	0.000

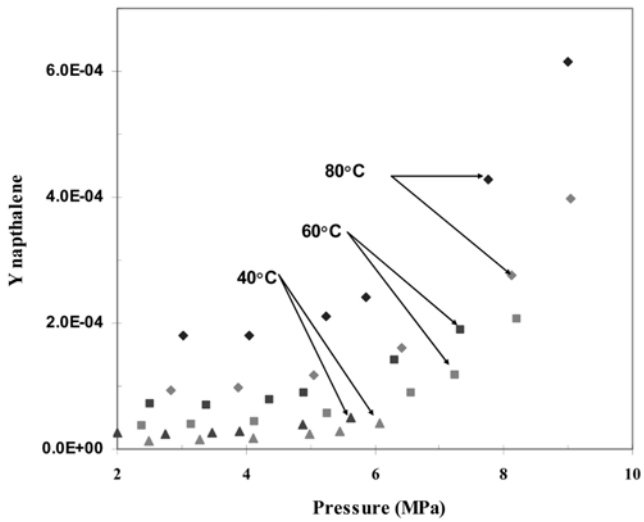

Fig. 5. Calculated vapor mole fraction of naphthalene as a function of pressure at 40, 60, and 80 °C. Red symbols: CO_2-benzene-naphthalene ($N_{napthalene}/N_{benzene}$=9 : 1), dark blue symbols: CO_2-hexane-naphthalene ($N_{napthalene}/N_{hexane}$=9 : 1).

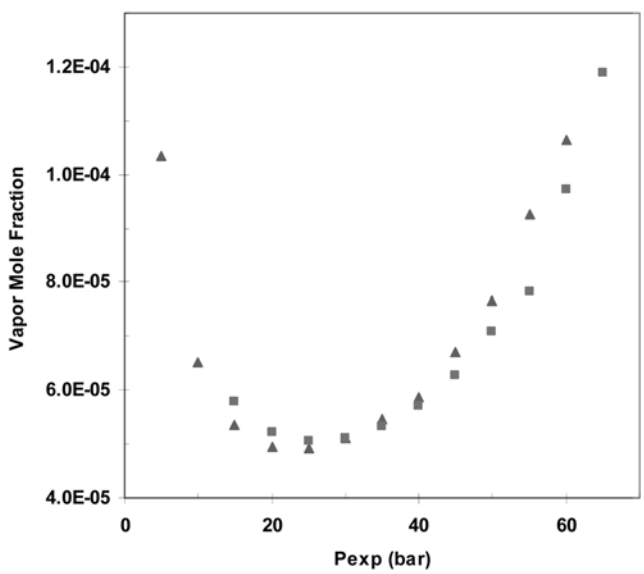

Fig. 6. Calculated vapor mole fraction of 2-methylnaphthalene as a function of pressure at 50 °C. ▲ CO_2-n-butylbenzene-2-methylnaphthalene, ■ CO_2-n-decane-2-methylnaphthalene.

NOMENCLATURE

a,b : parameters of the Peng-Robinson equation of state

F : the objective function to be minimized when calculating the interaction parameters for the Peng-Robinson equation of state
k_{ij} : binary interaction parameter [Eq. (2)]
l_{ij} : binary interaction parameter [Eq. (4)]
N : total number of components in the system
N_D : number of data points used in the regression of data
P : pressure
T : temperature
x_i : liquid-phase mole fraction of component i

Subscripts
i, j : component identification
ij : i-j pair

REFERENCES

1. G. Brunner and R. Dohrn, *Fluid Phase Equilibria*, **106**, 213 (1995).
2. M. Christov and R. Dohrn, *Fluid Phase Equilibria*, **202**, 153 (2002).
3. T. A. AlSahhaf, R. S. AI-Ameeri and S. E. M. Hamam, *Fluid Phase Equilibria*, **34**, 83 (1987).
4. T. A. AlSahhaf, R. S. AI-Ameeri, I. M. AlNashef and S. E. M. Hamam, *Fluid Phase Equilibria*, **55**, 231 (1990).
5. M. W. Barrick, J. M. Anderson and R. L. Robinson, Jr., *J. Chem. Eng. Data*, **32**, 372 (1987).
6. Y. H. Li, K. H. Dillard and R. L. Robinson, Jr., *J. Chem. Eng. Data*, **26**, 55 (1981).
7. G. I. Kaminishi, C. Yokoyama and S. Takahashi, *Fluid Phase Equilibria*, **34**, 83 (1987).
8. O. W. Morris and M. D. Donohue, *J. of Chem. Eng. Data*, **30**, 259 (1985).
9. D. Y. Peng and D. B. Robinson, *Ind. Eng Chem. Fundam*., **15**, 59 (1976).
10. R. C. Reid, J. M. Prausnitz and E. B. Poling, *The properties of gases and liquids*, 4th ed., McGraw-Hill, USA (1988).
11. N. B. Vergaftik, *Tables of the thermophysical properties of liquids and gases*, 2nd edition, Wiley, USA (1975).
12. A. A. Kulkarni, K. D. Luks and J. P. Kohn, *J. of Chem. Eng. Data*, **19**, 349 (1974).
13. H. W. Yang, K. D. Luks and J. P. Kohn, *J. of Chem. Eng. Data*, **21**, 330 (1976).
14. I. Nieuwoudt and M. du Rand, *Journal of Supercritical Fluids*, **22**, 185 (2002).